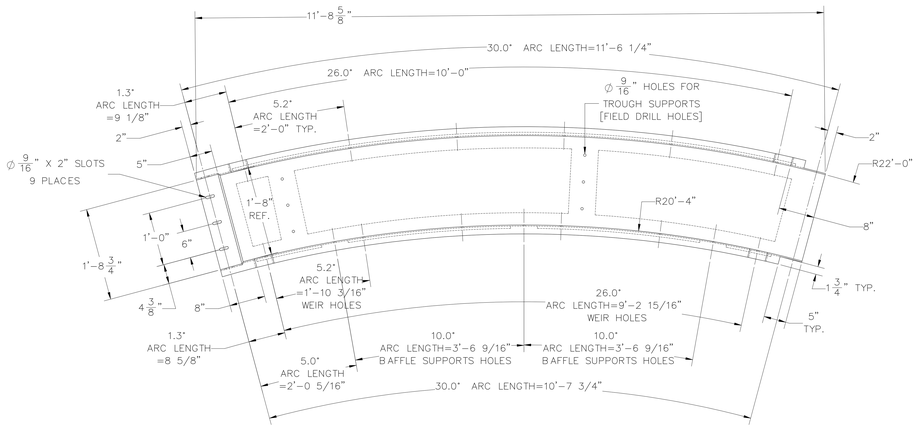

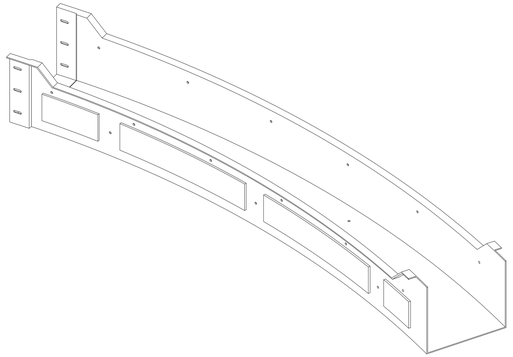

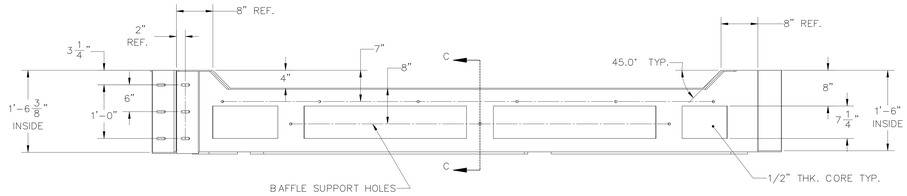

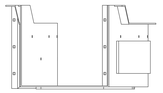

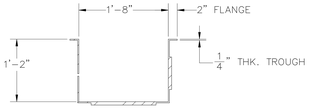

SECTION C–C

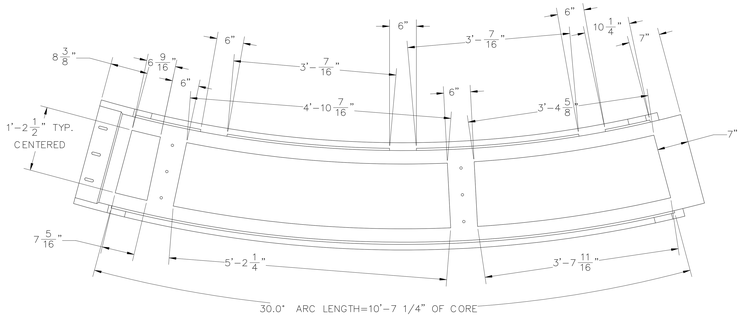

TROUGH "A"

PROPRIETARY AND CONFIDENTIAL
THE INFORMATION CONTAINED IN THIS DRAWING IS THE SOLE PROPERTY OF MFG CONSTRUCTION AND WATER PRODUCTS. ANY REPRODUCTION IN PART OR AS A WHOLE WITHOUT THE WRITTEN PERMISSION OF MFG CONSTRUCTION AND WATER PRODUCTS IS PROHIBITED.

MFG CONSTRUCTION & WATER PRODUCTS
55 4th Ave Union City, PA 16438
Ph: 814.438.3959 Fax: 814.438.8538
www.MFGWTP.com

	NAME	DATE
DRAWN		
CHECKED		
ENG APPR.		
MFG APPR.		

DIMENSIONS ARE IN FEET AND INCHES 11/16

TITLE:

SIZE D | DWG. NO. | REV

SCALE: 1:12 WEIGHT:

D-place bottom details